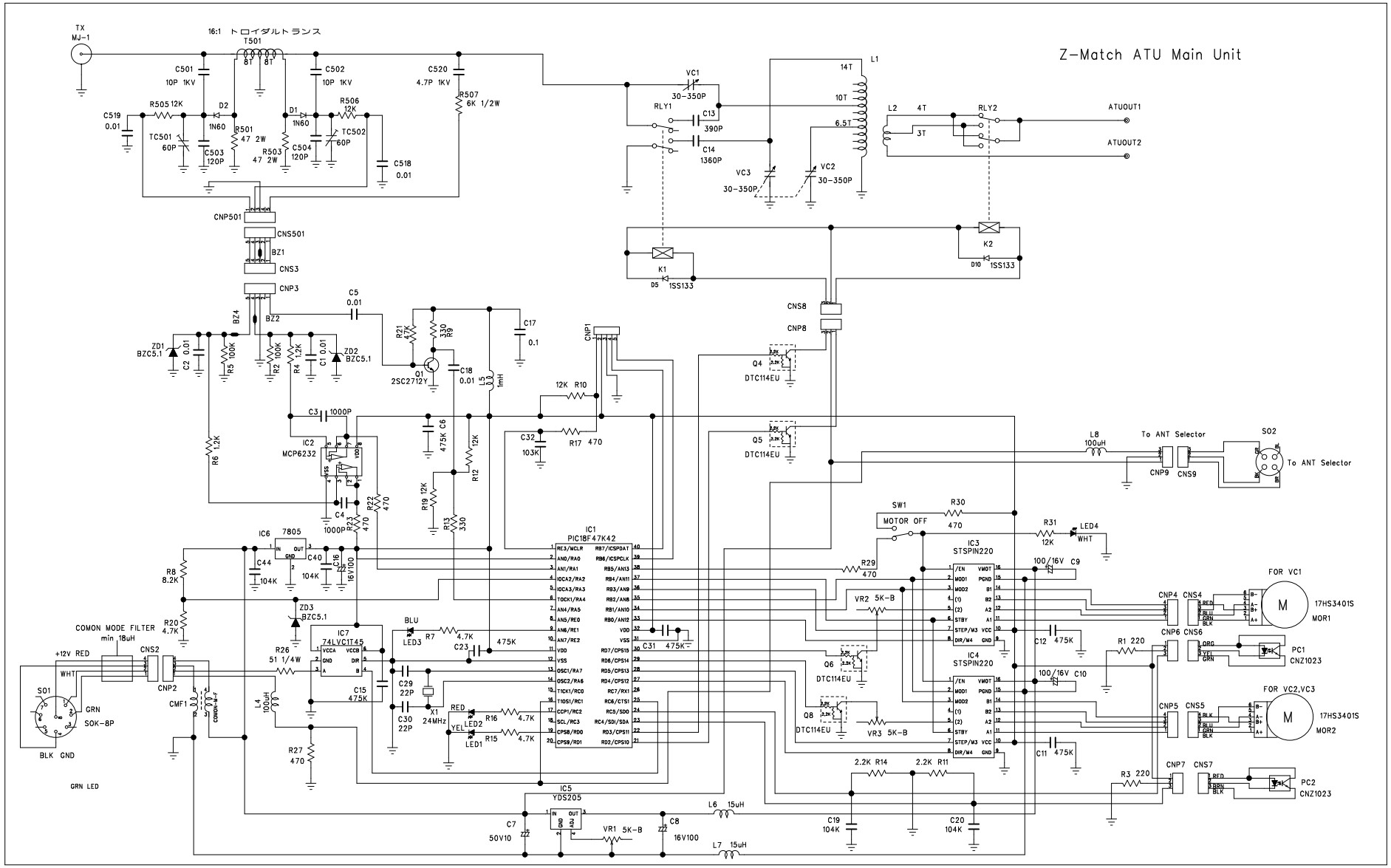
Z-Match ATU Main Unit
TX
MJ-1
16:1 トロイダルトランス
T501
8T 8T
C501
10P 1KV
C502
10P 1KV
C520
4.7P 1KV
R507
6K 1/2W
R505 12K
D2
1N60
D1
1N60
R506
12K
C519
0.01
TC501
60P
R501
47 2W
C503
120P
R503
47 2W
C504
120P
TC502
60P
C518
0.01
CNP501
CNS501
BZ1
CNS3
CNP3
BZ4
BZ2
C5
0.01
ZD1
BZC5.1
C2 0.01
R5 100K
R2 100K
R4 1.2K
C1 0.01
ZD2
BZC5.1
R21
47K
R9
330
Q1
2SC2712Y
C18
0.01
L5
1mH
C17
0.1
CNP1
12K R10
C3 1000P
IC2
MCP6232
R6 1.2K
C4
1000P
R22
470
R23
470
475K C6
12K
R12
R19 12K
R13
330
C32
103K
R17 470
IC6
7805
C44
104K
C40
104K
C16
16V100
R8
8.2K
R20
4.7K
ZD3
BZC5.1
IC7
74LVC1T45
COMON MODE FILTER
min 18uH
+12V RED
WHT
GRN
SOK-8P
S01
BLK GND
CNS2
CNP2
CMF1
R26
51 1/4W
L4
100uH
R27
470
C15
475K
BLU
LED3
R7
4.7K
C23
475K
C29
22P
C30
22P
X1
24MHz
RED
LED2
VEL
LED1
R16
4.7K
R15
4.7K
IC1
PIC18F47K42
RE3/MCLR
AN0/RA0
AN1/RA1
OCA2/RA2
OCA3/RA3
TOCK1/RA4
AN4/RA5
AN5/RE0
AN6/RE1
AN7/RE2
VDD
VSS
OSC1/RA7
OSC2/RA6
T1CK1/RC0
T1OS1/RC1
CCP1/RC2
SCL/RC3
CPSB/RD0
CPS9/RD1
RB7/ICSPDAT
RB6/ICSPCLK
RB5/AN13
RB4/AN11
RB3/AN9
RB2/AN8
RB1/AN10
RB0/AN12
VDD
VSS
RD7/CPS15
RD6/CPS14
RD5/CPS13
RD4/CPS12
RC7/RX1
RC6/CTS1
RC5/SDO
RC4/SDI/SDA
RD3/CPS11
RD2/CPS10
C31 475K
IC5
YDS205
C7
50V10
VR1 5K-B
C8
16V100
L6 15uH
L7 15uH
GRN LED
VC1
30-350P
RLY1
C13
390P
C14
1360P
VC3
30-350P
VC2
30-350P
L1
14T
10T
6.5T
L2 4T
3T
RLY2
ATUOUT1
ATUOUT2
K1
D5 1SS133
K2
D10 1SS133
CNS8
CNP8
Q4
DTC114EU
Q5
DTC114EU
Q6
DTC114EU
Q8
DTC114EU
L8
100uH
To ANT Selector
CNP9
CNS9
SO2
To ANT Selector
SW1
MOTOR OFF
R30
470
R31
12K
LED4
WHT
R29
470
VR2 5K-B
VR3 5K-B
IC3
STSPIN220
IC4
STSPIN220
/EN
MOD1
MOD2
(1)
(2)
STBY
STEP/W3
DIR/M4
VMOT
PGND
B1
B2
A2
A1
VCC
GND
100/16V C9
100/16V C10
C12 475K
C11 475K
R1 220
R3 220
CNP4
CNS4
CNP6
CNS6
CNP5
CNS5
CNP7
CNS7
FOR VC1
17HS3401S
MOR1
PC1
CNZ1023
FOR VC2,VC3
17HS3401S
MOR2
PC2
CNZ1023
2.2K R14
2.2K R11
C19
104K
C20
104K