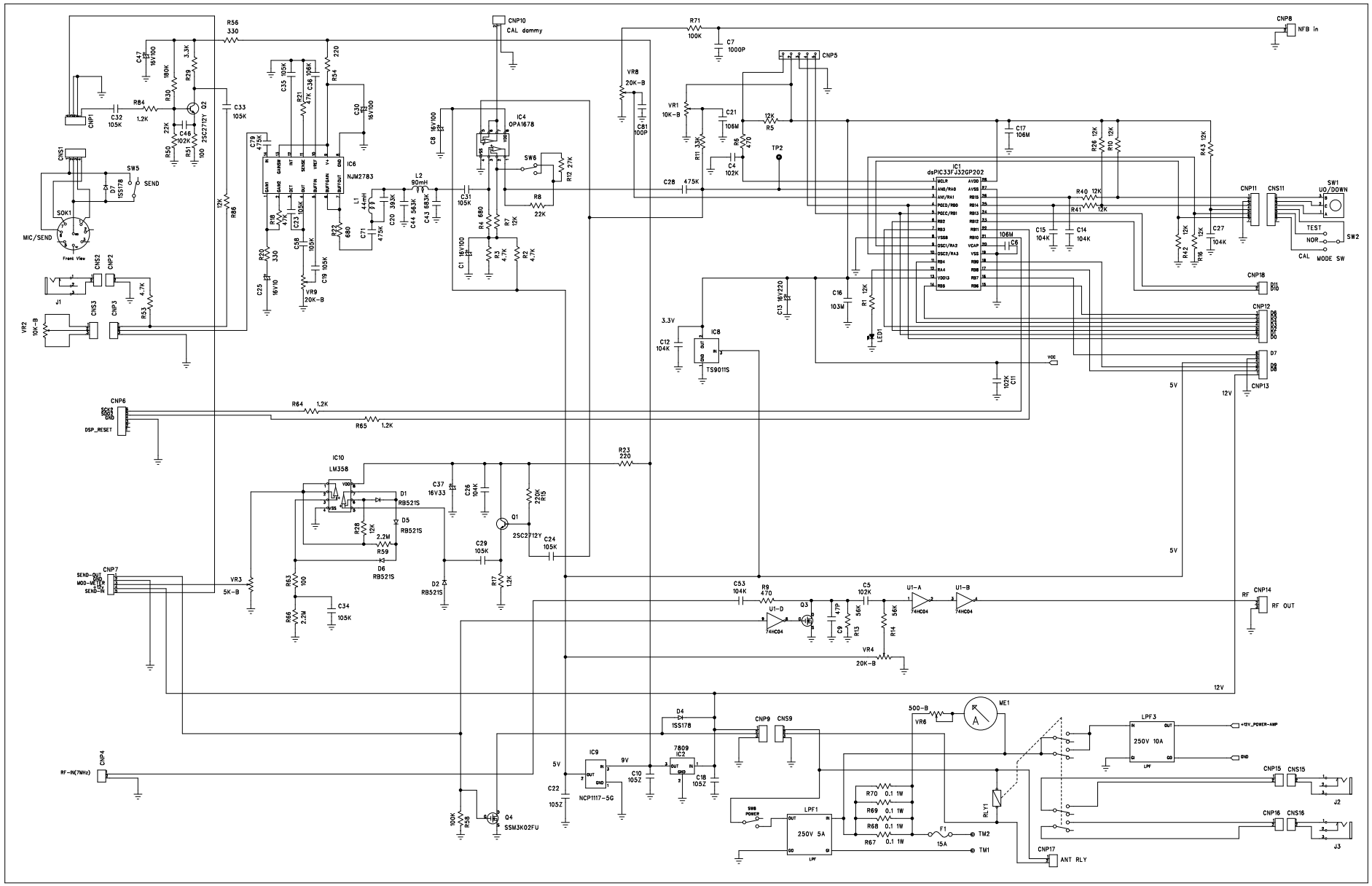
CNP10
CAL dummy
CNP8
NFB in
CNP5
IC1
dsPIC33FJ32GP202
IC4
OPA1678
IC6
NJM2783
IC8
TS9011S
IC10
LM358
IC9
NCP1117-5G
IC2
7809
Q4
SSM3K02FU
Q1
2SC2712Y
Q2
2SC2712Y
Q3
U1-A
U1-B
U1-D
74HC04
CNP1
CNS1
SW5
SEND
SW6
SW1
UO/DOWN
SW2
TEST
NOR
CAL
MODE SW
CNP11
CNS11
CNP18
CNP12
CNP13
CNP6
DSP_RESET
CNP7
SEND-OUT
MOD-OUT
SEND-IN
CNP4
RF-IN(7MHz)
CNP14
RF OUT
CNP9
CNS9
LPF1
250V 5A
LPF3
250V 10A
RLY1
CNP15
CNS15
CNP16
CNS16
CNP17
ANT RLY
J2
J3
ME1
TM1
TM2
F1
15A
+13V_POWER-AMP
GND
5V
12V
3.3V
VCC

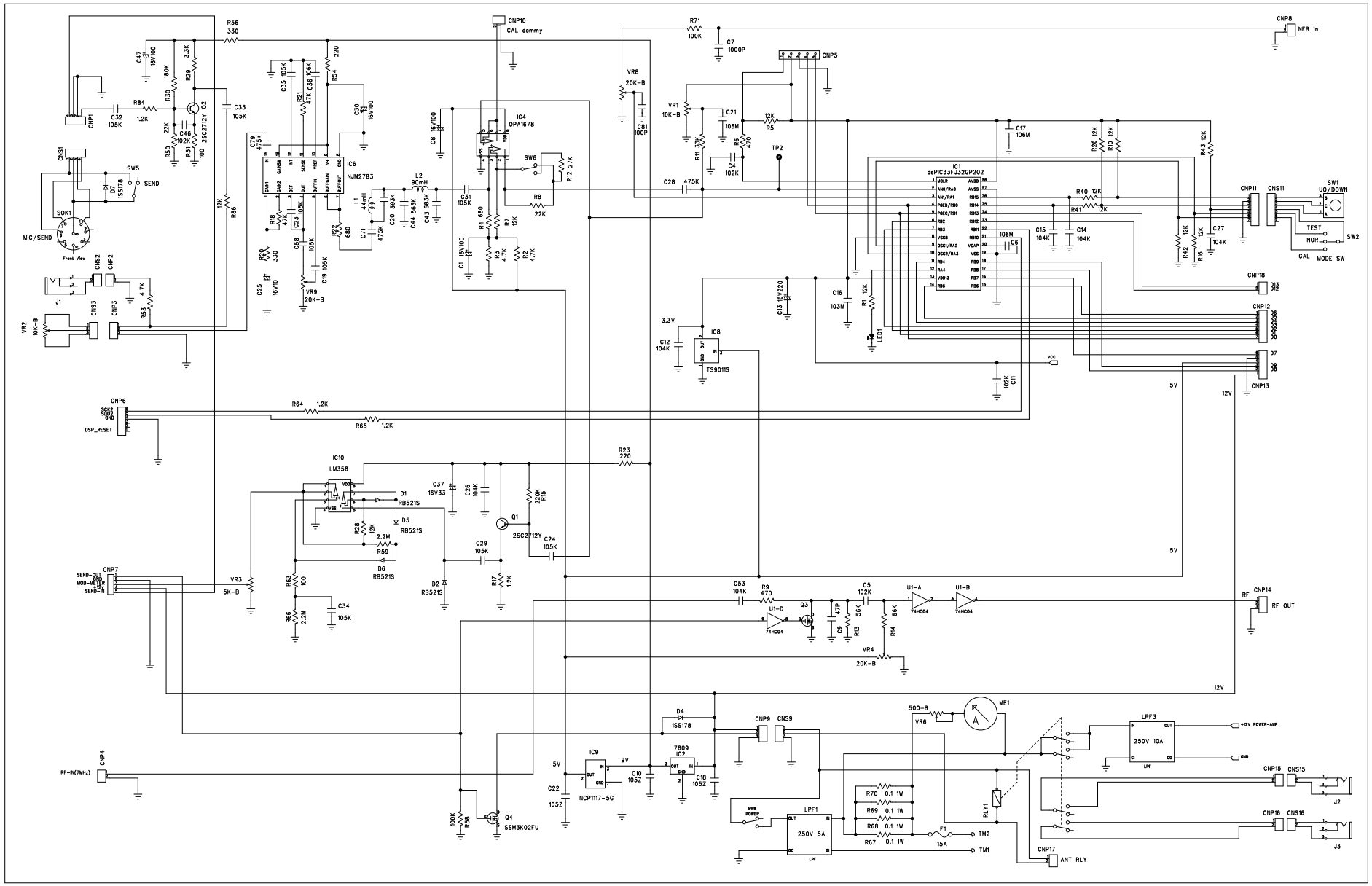
CNP10
CAL dummy
CNP8
NFB in
CNP5
IC1
dsPIC33FJ32GP202
IC4
OPA1678
IC6
NJM2783
IC8
TS9011S
IC10
LM358
IC9
NCP1117-5G
IC2
7809
CNP1
CNS1
SW5
SEND
SOK1
MIC/SEND
Front View
CNS2
CNP2
J1
CNS3
CNP3
VR2
10K-B
CNP6
DSP_RESET
CNP7
SEND-OUT
MOD-OUT
SEND-IN
CNP4
RF-IN(7MHz)
CNP11
CNS11
SW1
UO/DOWN
TEST
NOR
CAL
MODE SW
SW2
CNP18
CNP12
CNP13
D7
CNP14
RF
RF OUT
CNP9
CNS9
ME1
LPF3
250V 10A
LPF1
250V 5A
RLY1
F1
15A
TM2
TM1
CNP15
CNS15
J2
CNP16
CNS16
J3
CNP17
ANT RLY
Q4
SSM3K02FU
Q3
Q1
2SC2712Y
Q2
2SC2712Y
D1
RB521S
D2
RB521S
D5
RB521S
D6
RB521S
D4
1SS178
D3
1SS178
LED1
TP2
VR1
10K-B
VR8
20K-B
VR9
20K-B
VR3
5K-B
VR4
20K-B
VR6
500-B
R56
330
R71
100K
C7
1000P
C81
100P
C17
106M
C28
475K
C32
105K
R84
1.2K
C33
105K
R64
1.2K
R65
1.2K
R23
220
C53
104K
R9
470
C5
102K
U1-A
U1-B
U1-D
74HC04
R14
56K
R13
56K
C9
47P
VR4
20K-B
12V
5V
3.3V
VCC