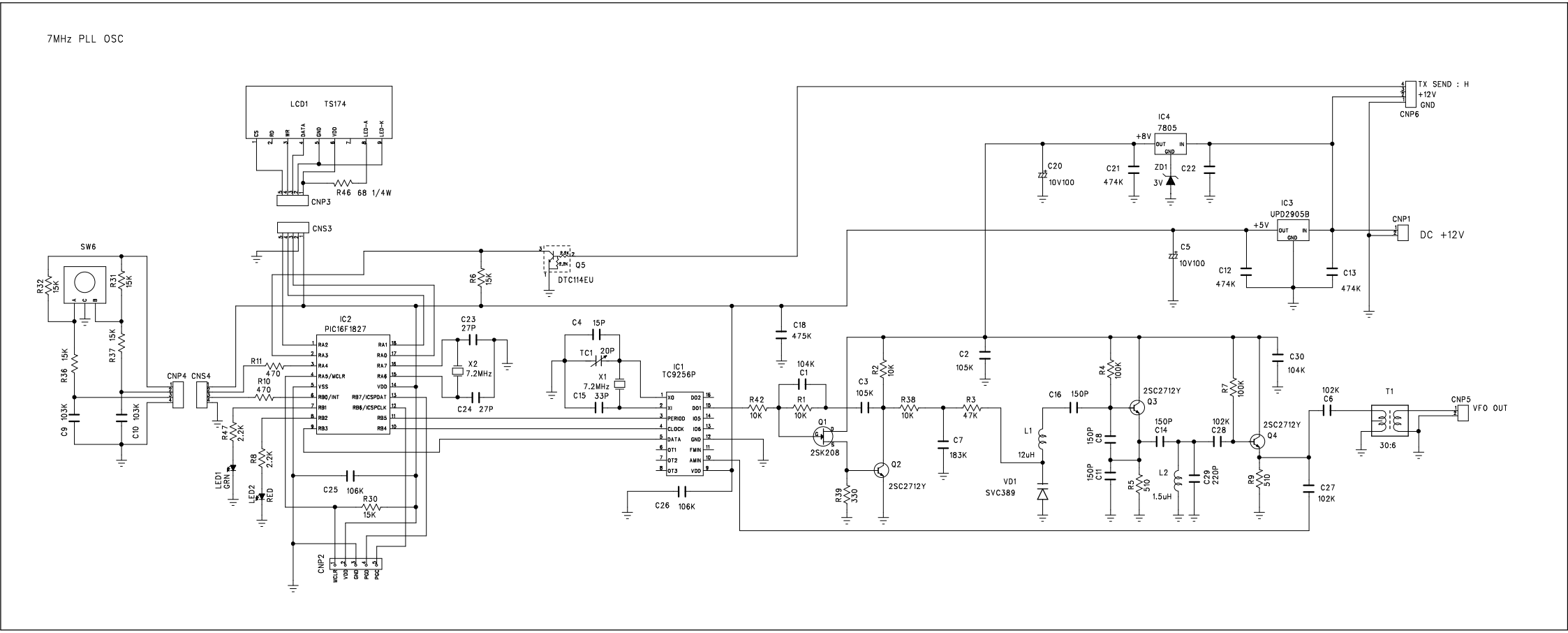
7MHz PLL OSC
LCD1 TS174
CS RD WR DATA GND VDD LED-A LED-K
R46 68 1/4W
CNP3
CNS3
SW6
R32 15K
R31 15K
R36 15K
R37 15K
C9 103K
C10 103K
CNP4
CNS4
R11 470
R10 470
R47 2.2K
R8 2.2K
LED1 GRN
LED2 RED
IC2
PIC16F1827
RA2 RA3 RA4 RA5/MCLR VSS RB0/INT RB1 RB2 RB3
RA1 RA0 RA7 RA6 VDD RB7/ICSPDAT RB6/ICSPCLK RB5 RB4
C25 106K
R30 15K
CNP2
MCLR VDD GND PGD PGC
R6 15K
Q5
DTC114EU
C23 27P
X2 7.2MHz
C24 27P
C4 15P
TC1 20P
X1 7.2MHz
C15 33P
IC1
TC9256P
XO XI PERIOD CLOCK DATA OT1 OT2 OT3
DO2 DO1 IO5 IO6 GND FMIN AMIN VDD
C26 106K
R42 10K
C18 475K
104K C1
R1 10K
Q1 2SK208
R2 10K
C3 105K
R38 10K
Q2 2SC2712Y
R39 330
C7 183K
R3 47K
C2 105K
L1 12uH
VD1 SVC389
C16 150P
R4 100K
150P C8
150P C11
2SC2712Y Q3
150P C14
R5 510
L2 1.5uH
102K C28
C29 220P
R7 100K
2SC2712Y Q4
R9 510
C30 104K
102K C6
C27 102K
T1 30:6
CNP5 VFO OUT
IC4 7805
+8V
OUT IN GND
C20 10V100
C21 474K
ZD1 3V
C22
IC3 UPD2905B
+5V
C5 10V100
C12 474K
C13 474K
CNP1 DC +12V
CNP6 TX SEND : H +12V GND