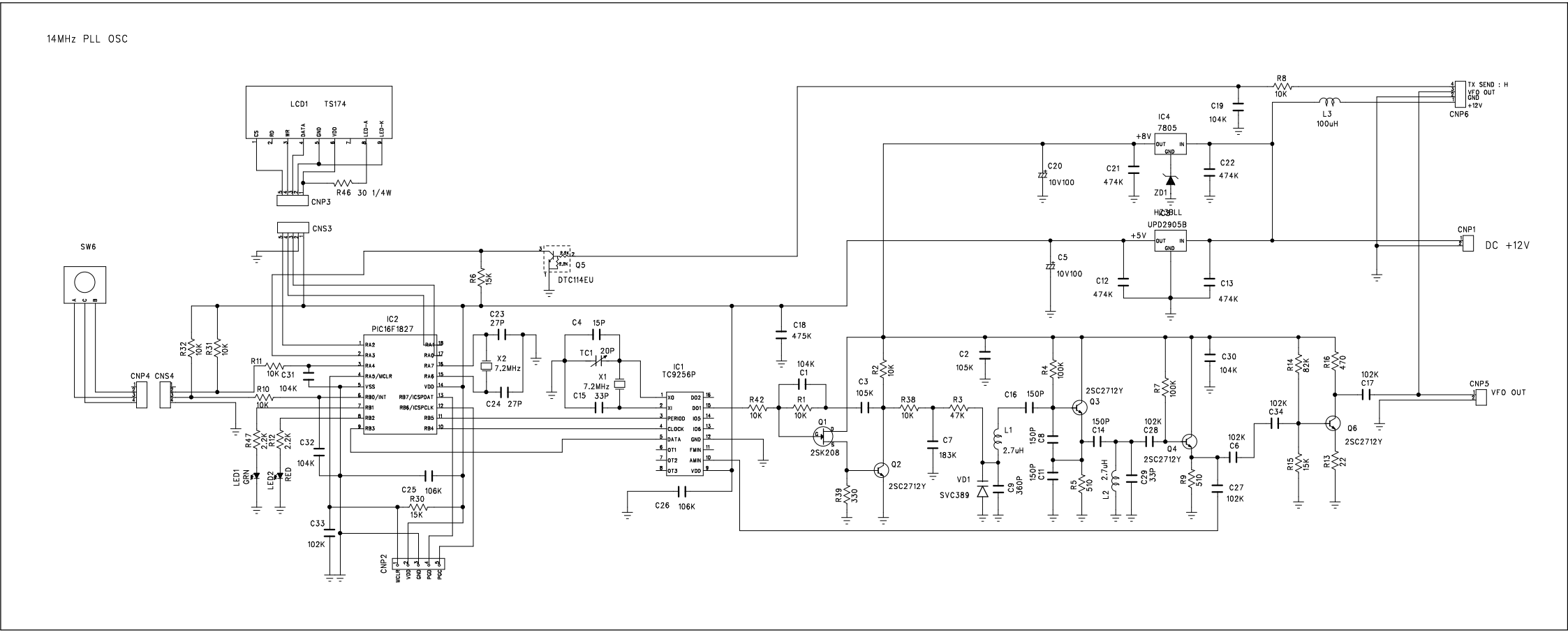
14MHz PLL OSC
LCD1 TS174
R46 30 1/4W
CNP3
CNS3
SW6
CNP4
CNS4
IC2
PIC16F1827
R32 10K
R31 10K
R11 10K
C31 104K
R10 10K
R47 2.2K
R12 2.2K
LED1 GRN
LED2 RED
C32 104K
C33 102K
C25 106K
R30 15K
CNP2
R6 15K
Q5
DTC114EU
C23 27P
X2 7.2MHz
C24 27P
C4 15P
TC1 20P
X1 7.2MHz
C15 33P
IC1
TC9256P
C18 475K
C1 104K
R1 10K
Q1
2SK208
R42 10K
R2 10K
C3 105K
R38 10K
R3 47K
C7 183K
Q2
2SC2712Y
R39 330
VD1
SVC389
C9 360P
C2 105K
C16 150P
L1 2.7uH
C8 150P
C11 150P
R5 510
L2 2.7uH
C29 33P
R4 100K
Q3
2SC2712Y
C14 150P
C28 102K
Q4
2SC2712Y
R7 100K
R9 510
C6 102K
C27 102K
C30 104K
C34 102K
R14 82K
R15 15K
R16 470
R13 22
Q6
2SC2712Y
C17 102K
R8 10K
L3 100uH
C19 104K
IC4
7805
+8V
C20 10V100
C21 474K
ZD1
C22 474K
IC3
UPD2905B
+5V
C5 10V100
C12 474K
C13 474K
CNP6
TX SEND : H
VFO OUT
GND
+12V
CNP1
DC +12V
CNP5
VFO OUT