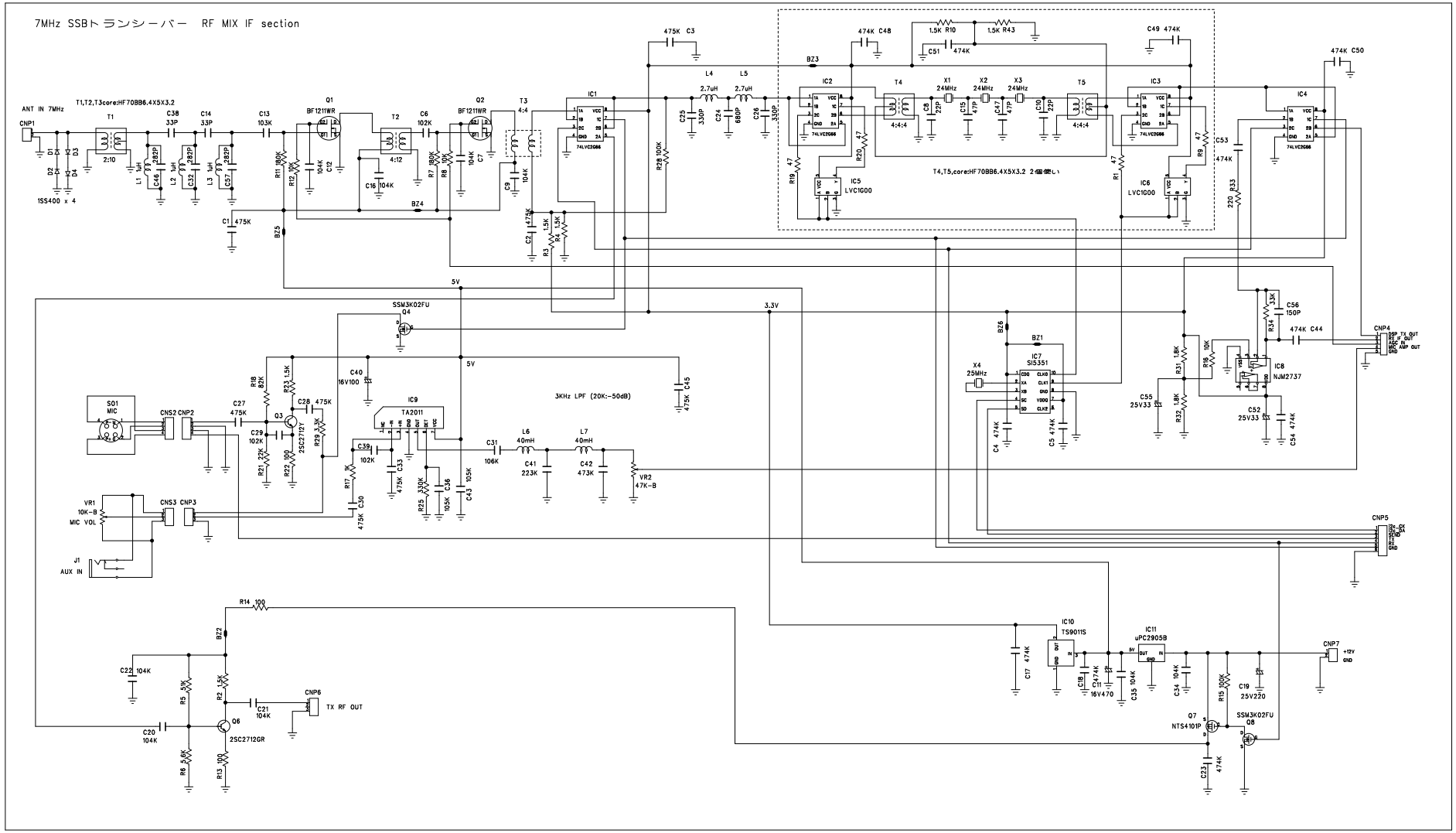
7MHz SSBトランシーバー RF MIX IF section
ANT IN 7MHz
CNP1
T1,T2,T3core:HF70BB6.4X5X3.2
T1
2:10
1SS400 x 4
C38 33P
C14 33P
C13 103K
Q1 BF1211WR
T2
4:12
C6 102K
Q2 BF1211WR
T3 4:4
IC1 74LVC2G66
475K C3
L4 2.7uH
L5 2.7uH
C25 330P
C24 680P
C26 330P
BZ3
IC2 74LVC2G66
474K C48
1.5K R10
1.5K R43
C51 474K
T4 4:4:4
X1 24MHz
X2 24MHz
X3 24MHz
T5 4:4:4
IC3 74LVC2G66
C49 474K
IC4 74LVC2G66
474K C50
IC5 LVC1G00
IC6 LVC1G00
T4,T5,core:HF70BB6.4X5X3.2
C53 474K
R33 220
C1 475K
BZ5
BZ4
R28 100K
5V
3.3V
SSM3K02FU Q4
SO1 MIC
CNS2 CNP2
C27 475K
Q3 2SC2712Y
C28 475K
R18 82K
R23 1.5K
R29 3.3K
C29 102K
R21 2.2K
R22 100
C40 16V100
IC9 TA2011
3KHz LPF (20K:-50dB)
C45 475K
C39 102K
R17 1K
C30 475K
C33 475K
R25 330K
C36 105K
C43 105K
C31 106K
L6 40mH
C41 223K
L7 40mH
C42 473K
VR2 47K-B
VR1 10K-B MIC VOL
CNS3 CNP3
J1 AUX IN
BZ6
BZ1
X4 25MHz
IC7 SI5351
C4 474K
C5 474K
C55 25V33
R31 1.8K
R32 1.8K
R16 10K
IC8 NJM2737
C52 25V33
C54 474K
C56 150P
R34 33K
474K C44
CNP4
CNP5
R14 100
BZ2
C22 104K
R5 5.1K
R2 1.5K
C21 104K
CNP6 TX RF OUT
C20 104K
Q6 2SC2712GR
R6 5.6K
R13 100
IC10 TS9011S
C17 474K
C18 474K
C11 16V470
IC11 μPC2905B
C35 104K
C34 104K
CNP7 +12V GND
R15 100K
C19 25V220
Q7 NTS4101P
SSM3K02FU Q8
C23 474K