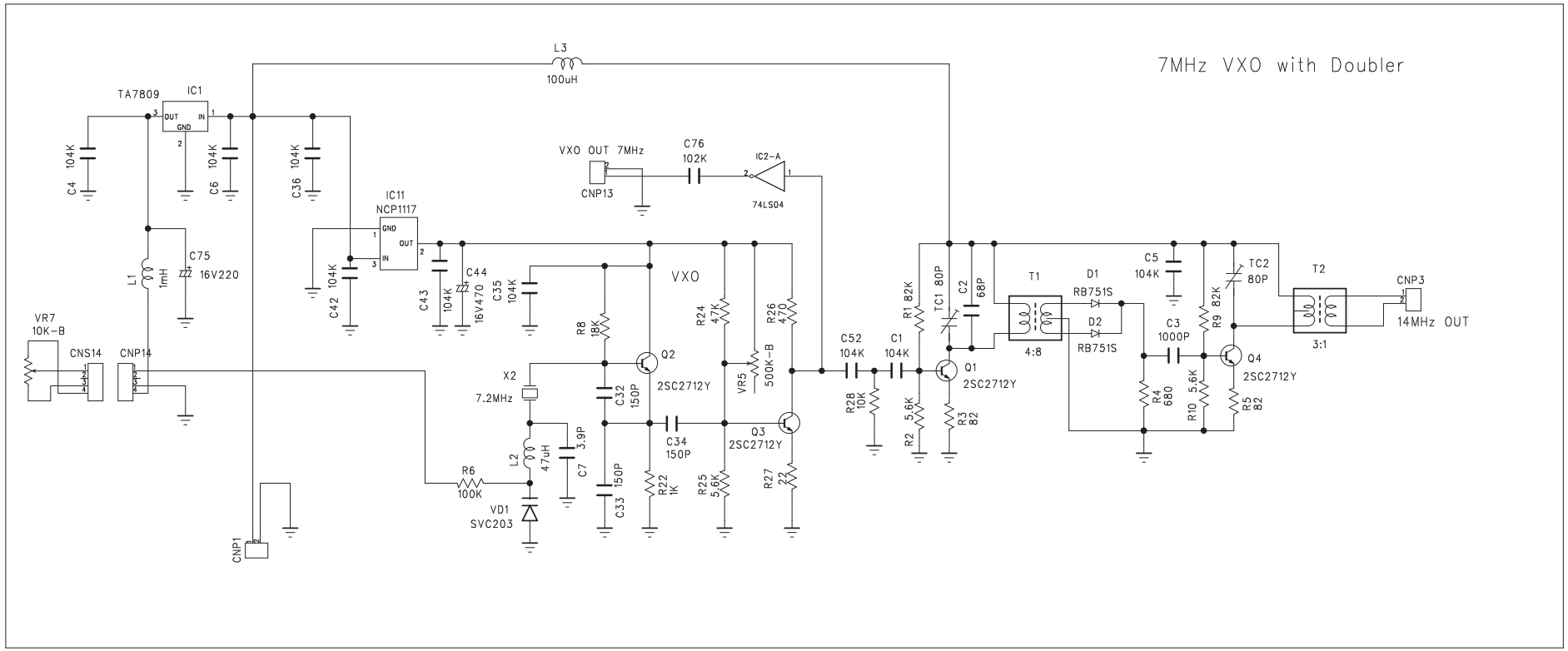VXOwithDobler.sch-1 - Sun Dec 17 09:05:27 2017