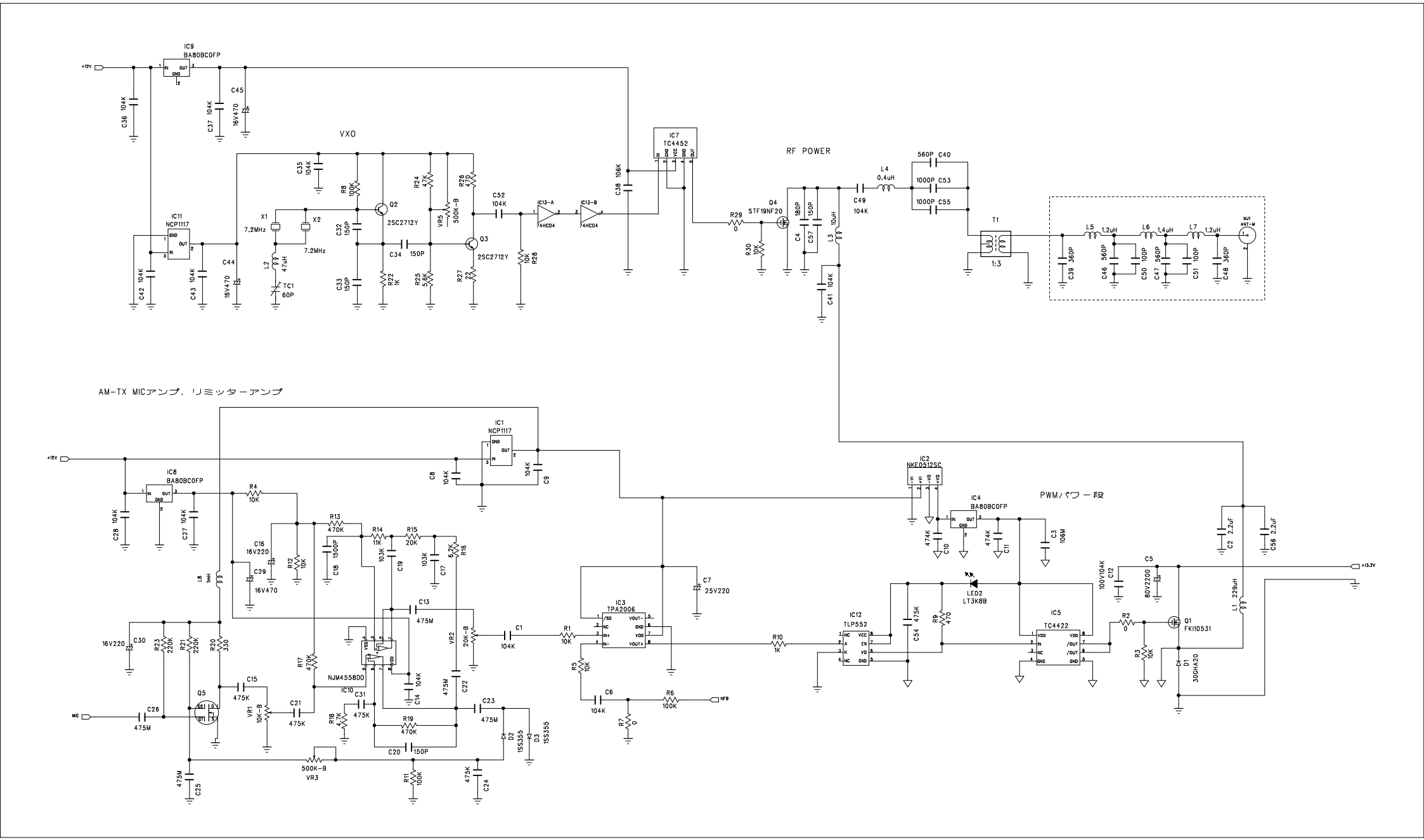AMTX_MOD.sch-1 - Sat Jan 30 09:57:06 2016