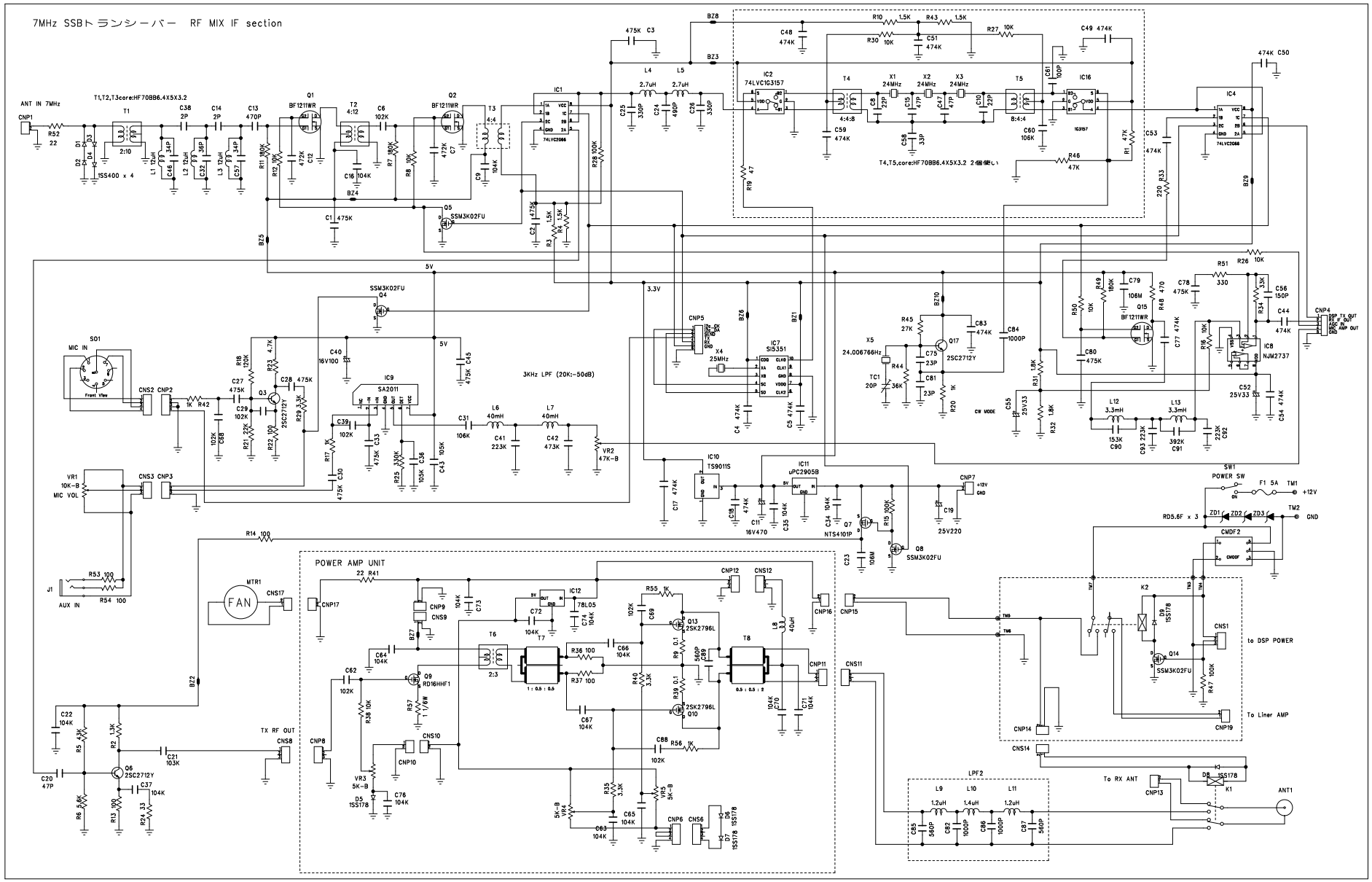
7MHz SSBトランシーバー RF MIX IF section
ANT IN 7MHz
T1,T2,T3core:HF70BB6.4X5X3.2
T4,T5,core:HF70BB6.4X5X3.2
3KHz LPF (20K:-50dB)
POWER AMP UNIT
FAN
MIC IN
MIC VOL
AUX IN
TX RF OUT
to DSP POWER
To Liner AMP
To RX ANT
POWER SW
+12V
GND
CW MODE
LPF2
ANT1